Resistance thermometer
For sanitary applications, for orbital welding
Model TR22-B

for further approvals
see page 11

Applications

- Sanitary applications
- Food and beverage industry
- Bio and pharmaceutical industry, production of active ingredients

Special features

- Simplified calibration through removable measuring inserts
- Stainless steel head in optimised hygienic design, easily cleanable in all mounting positions (patent, industrial property right: GM 000984349)
- Pt100, 4 … 20 mA or HART® protocol, FOUNDATION™ Fieldbus and PROFIBUS® PA output possible
- Wetted parts from stainless steel 1.4435
- Self-draining and dead-space minimised

Model TR22-B with flow-through housing for orbital welding
Options: Sealing combination at neck tube, cable gland in hygienic design

Description

The model TR22-B resistance thermometer is used for temperature measurement in sanitary applications.
To integrate it into the process, the patented thermowell model TW61 (patent, property right: DE 102010037994 and US 12 897.080) is directly orbitally welded into a pipeline.

The connection ends are smooth and prepared for orbital welding. The process connections meet the stringent requirements, in terms of materials and design, of hygienic measuring points.

For easy calibration or maintenance, the sensor is removable without having to break into the process or disconnect the electrical connection. Thus hygiene risks can be minimised and downtimes can be reduced.

The spring-loaded measuring insert guarantees the contact between the sensor tip and the bottom of the thermowell and thus ensures a fast response time and high accuracy.

Data sheets showing similar products:
Resistance thermometer, replaceable sensor; model TR22-A; see data sheet TE 60.22
Miniature resistance thermometer, with flange connection; model TR21-A; see data sheet TE 60.26
Miniature resistance thermometer, for orbital welding; model TR21-B; see data sheet TE 60.27
Miniature resistance thermometer, with welded flange connection; model TR21-C; see data sheet TE 60.28
Thermowell for sanitary applications, for orbital welding; model TW61; see data sheet TW 95.61

Part of your business

Specifications

Output signal Pt100	
Temperature range	Measuring range -50 ... +150 °C (-58 ... +302 °F)
Sensor	
■ Measuring element (measuring current: 0.1 ... 1.0 mA)	■ Pt100 (thin-film) ■ Face-sensitive Pt100 (thin-film) [1]
■ Connection method	■ 1 x 3-wire ■ 1 x 4-wire ■ 2 x 3-wire
Tolerance value of the measuring element [2] per IEC 60751 (class accuracy)	■ Class AA 0 ... 150 °C ■ Class A -30 ... +150 °C ■ Class B -50 ... +150 °C
Response time (measurement per IEC 60751) [3]	t_{50} < 3.2 s t_{90} < 7.3 s
Measuring insert diameter	3 mm

For detailed specifications for Pt100 sensors, see Technical information IN 00.17 at www.wika.com.

Output signal 4 ... 20 mA, HART® protocol, FOUNDATION™ Fieldbus and PROFIBUS® PA			
Transmitter (selectable versions)	**Model T15**	**Model T32**	**Model T53**
Output			
■ 4 ... 20 mA	x	x	
■ HART® protocol		x	
■ FOUNDATION™ Fieldbus and PROFIBUS® PA			x
Connection method			
■ 1 x 3-wire or 1 x 4-wire	x	x	x
Measuring current	< 0.2 mA	< 0.3 mA	< 0.2 mA
Temperature range	Measuring range -50 ... +150 °C (-58 ... +302 °F) [4], other measuring ranges are adjustable		
Response time (measurement per IEC 60751) [3]	t_{50} < 3.2 s or t_{90} < 7.3 s + response time of the respective transmitter (see the data sheet for the respective transmitter)		
Measuring insert diameter	3 mm		

1) Through their small design, face-sensitive measuring resistors serve to reduce the heat dissipation with short insertion lengths. Available for temperature ranges up to 150 °C (302 °F). For thermowell insertion lengths of less than 11 mm, face-sensitive measuring resistors are generally used.
2) Specification is only valid for the measuring element. Depending on the process connection, the deviation can be greater.
3) Flow-through housing OD 26.9 mm
4) The connection head should therefore be protected from temperatures over 80 °C (176 °F).

Thermowell model TW61 [5]		
Designs	■ Flow-through housing ■ Angular housing	
Nominal widths of pipe	cf. tables of dimensions	
Surface roughness	in accordance with DIN 11866 row A, B:	Standard: R_a < 0.8 µm Option: R_a < 0.4 µm electropolished
	in accordance with DIN 11866 row C, ASME-BPE:	Standard: R_a < 0.76 µm Option: R_a < 0.38 µm electropolished
	others on request	
Materials	in accordance with DIN 11866 row A, B:	Stainless steel 1.4435
	in accordance with DIN 11866 row C, ASME-BPE:	Stainless steel 316L
Connection to thermometer	M24 x 1.5	
Thermowell diameter	cf. tables of dimensions	
Neck tube length M	The neck tube length M is adjusted to the length l_1 of 125 mm. The use of uniform measuring insert lengths, even for different nominal widths of pipe, reduces the inventory of the measuring inserts, particularly for larger plants. Additionally, the measuring insert length is optimised for an on-site calibration, for example with a WIKA temperature dry-well calibrator model CTD 9x00. further lengths to customer specifications	
Pressure ratings	cf. tables of dimensions	
Tube length TL and L_1, thermowell insertion length U_1	cf. tables of dimensions	

5) For TR22-B designs without thermowell, the insertion length is defined by the dimension l_1 from the lower edge of the connection head to the tip of the measuring insert (see “Dimensions of the connection heads in mm”). The thickness of bottom of the thermowell can be neglected for dimensioning. It is offset by the spring travel of the measuring insert.

Sealing combination (option)

The transition from the connection head to the thermowell is effected via an optional sealing combination (polyurethane) of flat gasket and wiper. This combination permanently prevents the penetration and depositing of humidity and impurities in this area (IP68). Additionally, the sealing combination simplifies the cleaning process significantly.

In combination with the patented BVS head and the cable gland in hygienic design, it delivers an easy-to-clean and hygienic measuring point, even in those areas not in contact with the product. The BVS head is designed in such a way that cleaning agents can run off easily and that no residues can accumulate on the case.

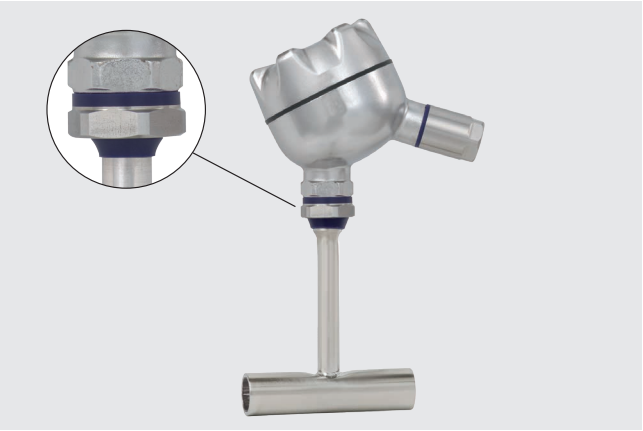

Connection head

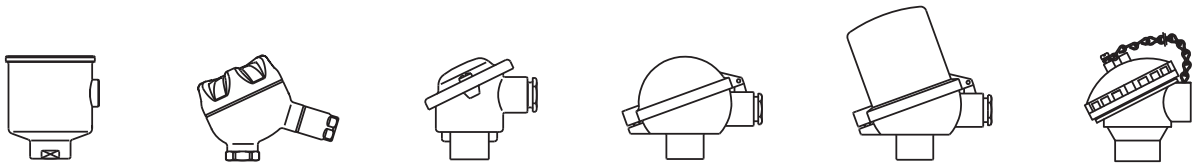

BVC | BVS | BS | BSZ, BSZ-K | BSZ-H, BSZ-HK | KN4-P, KN4-A

Model	Material	Cable entry thread size	Ingress protection	Cap	Surface
BVC	Stainless steel (1.4571)	M16 x 1.5 [1)]	IP68	Flat screw-on lid	Natural finish
BVS	Stainless steel (1.4308)	M20 x 1.5 [1)]	IP65	Screw-on lid, hygienic design	Precision casting, electropolished
BS	Aluminium	M20 x 1.5 [1)]	IP65, IP68	Cap with 2 screws	Blue, lacquered [2)]
BSZ	Aluminium	M20 x 1.5 [1)]	IP65, IP68	Hinged cover with cylinder head screw	Blue, lacquered [2)]
BSZ-K	PAV antistatic PA12	M20 x 1.5 [1)]	IP65	Hinged cover with cylinder head screw	Black
BSZ-H	Aluminium	M20 x 1.5 [1)]	IP65, IP68	Hinged cover with cylinder head screw	Blue, lacquered [2)]
BSZ-HK	PAV antistatic PA12	M20 x 1.5 [1)]	IP65	Hinged cover with cylinder head screw	Black
KN4-P	Polypropylene	M20 x 1.5	IP65	Screw-on lid	White
KN4-A	Aluminium	M20 x 1.5	IP65	Screw-on lid	Blue, lacquered [2)]

1) Standard
2) RAL 5022

Cable entry with M12 x 1 coupler connector / 4-pin (option)

Instead of a standard cable gland, the cable entry of a connection head can optionally be designed with a M12 x 1 (4-pin) coupler connector. The maximum resulting ingress protection is IP65.
Connecting with single strands for operation is not needed as pre-assembled cables can be used.

Connection head with M12 x 1 coupler connector (4-pin)

Connection head with digital indicator (option)

As an alternative to the standard connection head, the thermometer can be fitted with an optional DIH10 digital indicator. The connection head used for this is similar to the model BSZ-H head. For operation, a 4 ... 20 mA transmitter is needed, which is mounted to the measuring insert. The indication range is configured identically to the measuring range of the transmitter.

Designs with ignition protection type “intrinsically safe”, Ex i, are also available.

Connection head with digital indicator, model DIH10

Transmitter (option)

Depending on the connection head used, a transmitter can be mounted within the thermometer.

○ Mounted instead of terminal block
● Mounted within the cap of the connection head
– Mounting not possible

Mounting of 2 transmitters on request.

Connection head	Transmitter model		
	T15	T32	T53
BVC	○	○	○
BVS	○	○	○
BS	-	-	○
BSZ / BSZ-K	○	○	○
BSZ-H / BSZ-HK	●	●	●
KN4-P / KN4-A	○	○	○

Model	Description	Explosion protection	Data sheet
T15	Digital transmitter, PC configurable	Optional	TE 15.01
T32	Digital transmitter, HART® protocol	Optional	TE 32.04
T53	Digital transmitter, FOUNDATION™ Fieldbus und PROFIBUS® PA	Standard	TE 53.01

Overview of the process connections, thermowell variants

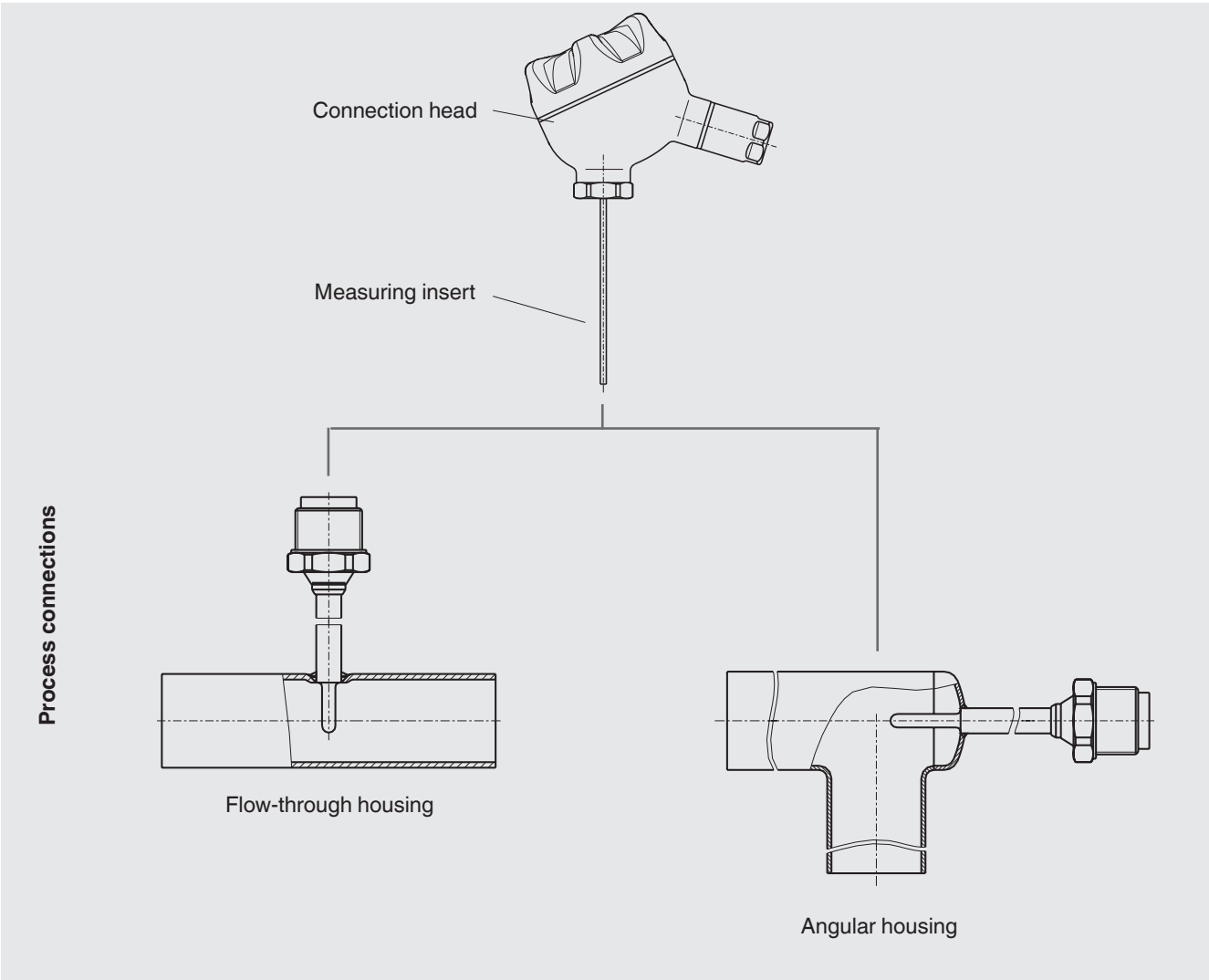

Dimensions in mm

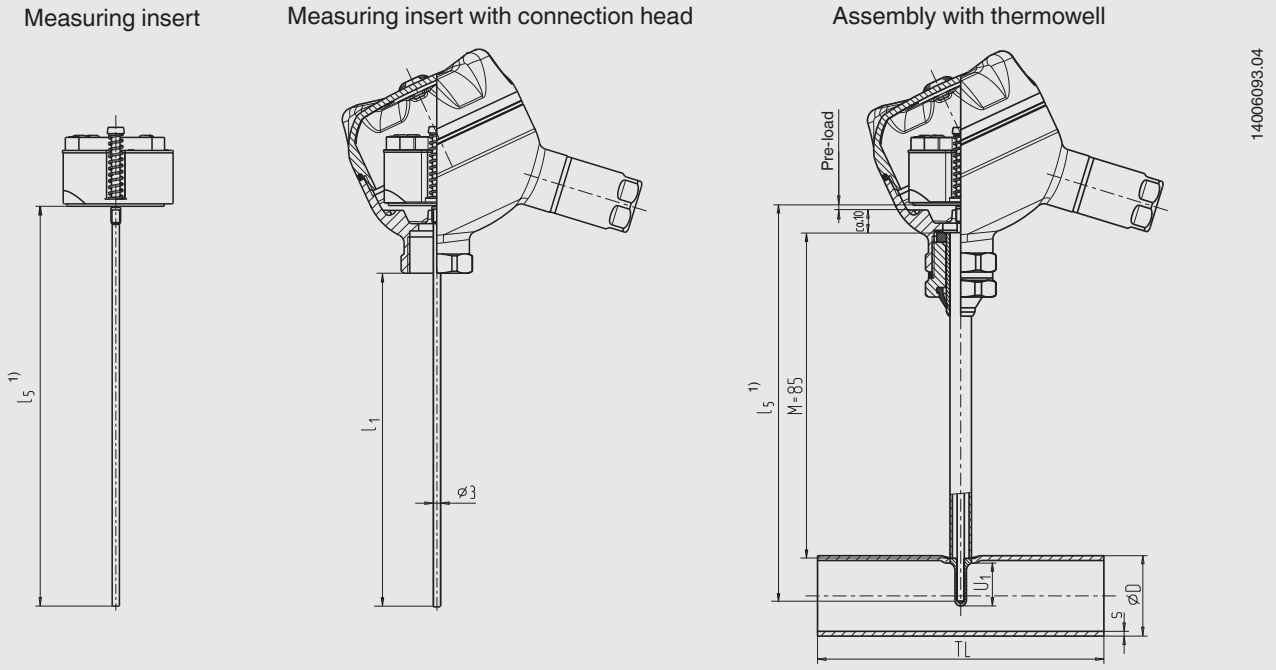

Legend:

l_1	Insertion length measuring insert	TL	Tube length
l_5	Sensor length	s	Pipe schedule
M	Neck tube length	Ø D	Outer diameter of pipe
U_1	Thermowell insertion length		

1) In the event of replacement, select a resistance thermometer measuring insert model TR11-A. (see data sheet TE 60.13)
Calculation of the corresponding sensor length, l_5:
Thermowell insertion length U_1 + neck tube length M (85 mm) + 5 mm pre-load + 10 mm head dimension

Standardisation of measuring inserts for different nominal widths of pipe

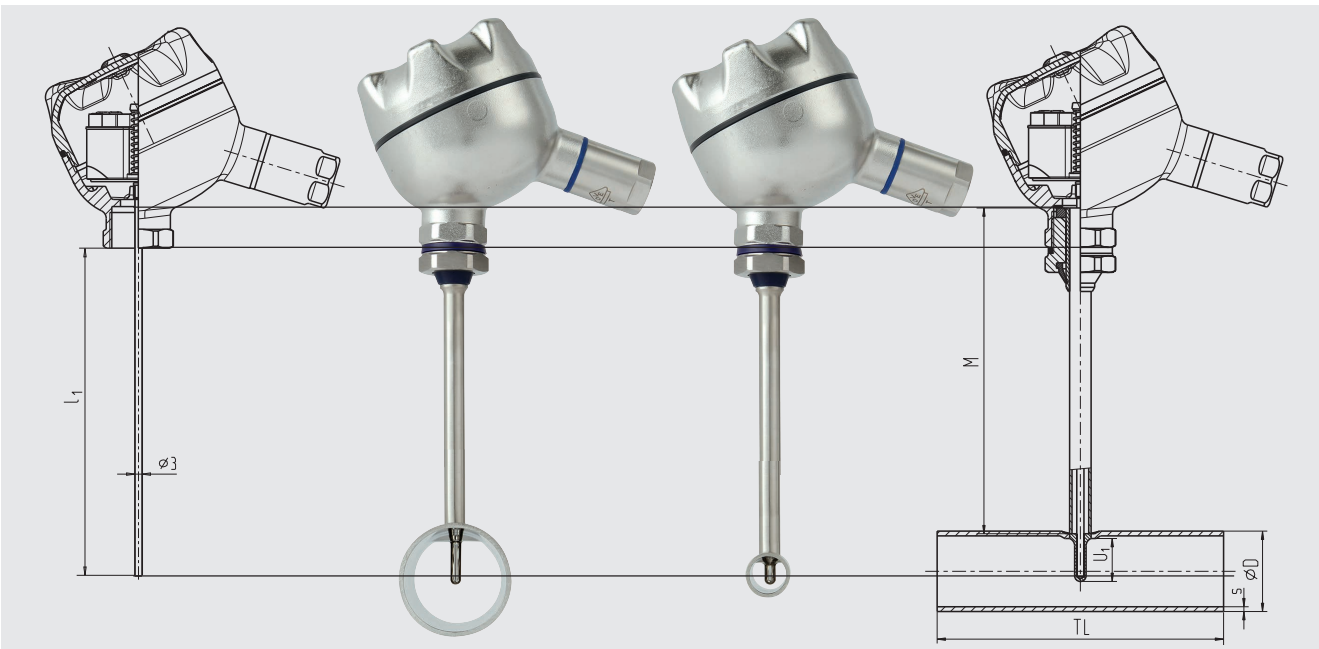

Due to the variable neck tube length M measuring inserts with standardised insertion lengths l_1 can be used. This minimises the variations and, thus, the stockholding of spare parts. At the same time, it ensures the use of the correct insertion length in the event of replacement.

Dimensions of the connection heads in mm

Model BVC

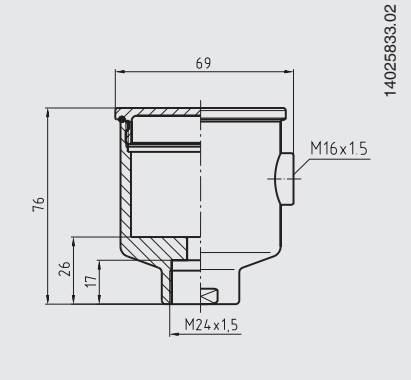

Model BVS

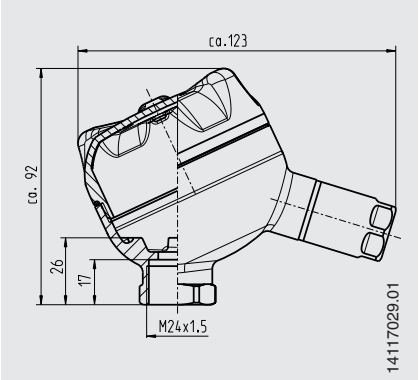

Model BS

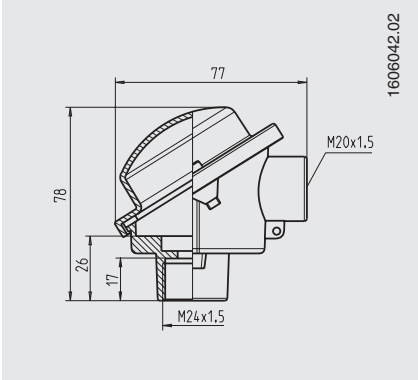

Models BSZ, BSZ-K

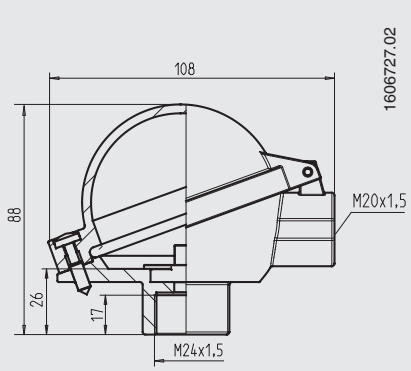

Models BSZ-H, BSZ-HK

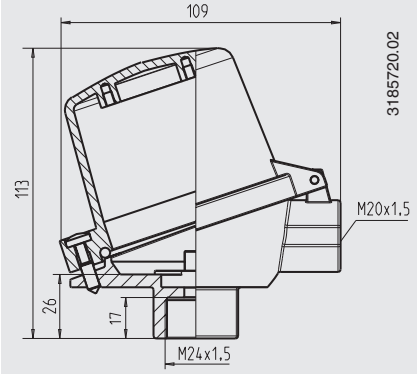

Models KN4-P, KN4-A

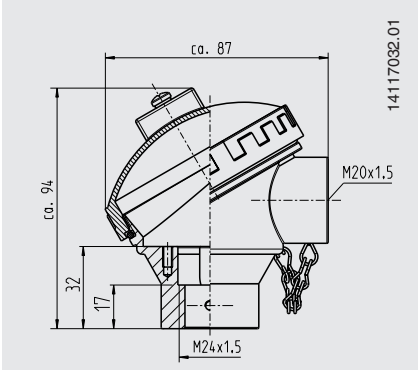

Dimensions of the process connections in mm (thermowells model TW61)

Flow-through housing

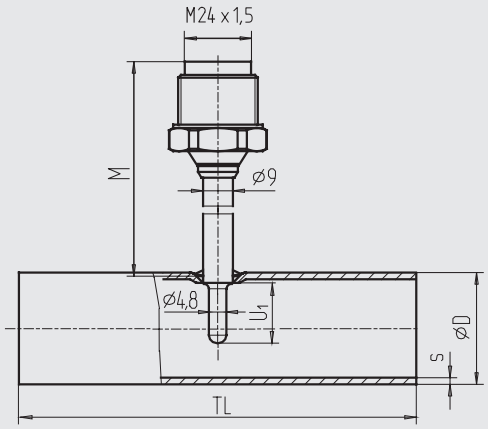

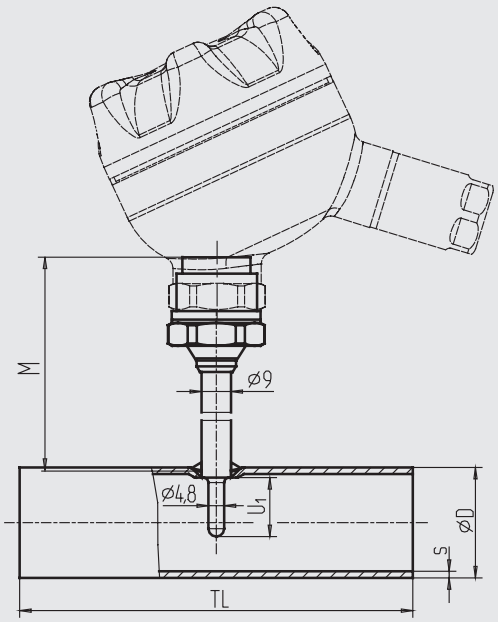

Nominal width of pipe		Nominal pressure in bar	Outer diameter of pipe	Pipe schedule	Tube length	Thermowell insertion length	Neck tube length
DN / OD		PN	Ø D	s	TL	U_1	M
DIN 11866 row A or metric	**10**	25	13	1.5	70	6	129
	15	25	19	1.5	70	9	126
	20	25	23	1.5	80	11	124
	25	25	29	1.5	100	18	117
	32	25	35	1.5	110	18	117
	40	25	41	1.5	120	18	117
	50	25	53	1.5	160	30	105
	65	16	70	2.0	210	30	105
	80	16	85	2.0	260	45	90
	100	12.5	104	2.0	310	45	90
DIN 11866 row B or ISO	**8 (13.5)**	25	13.5	1.6	64	6	129
	10 (17.2)	25	17.2	1.6	68	9	126
	15 (21.3)	25	21.3	1.6	72	11	124
	20 (26.9)	25	26.9	1.6	110	11	124
	25 (33.7)	25	33.7	2.0	120	18	117
	32 (42.4)	25	42.4	2.0	130	18	117
	40 (48.3)	25	48.3	2.0	130	18	117
	50 (60.3)	25	60.3	2.0	180	30	105
	65 (76.1)	16	76.1	2.0	220	30	105
	80 (88.9)	16	88.9	2.3	260	45	90
DIN 11866 row C or ASME BPE	**1/2"**	13.8	12.7	1.65	95.2	6	129
	3/4"	13.8	19.05	1.65	101.6	9	126
	1"	13.8	25.4	1.65	108.0	11	124
	1 1/2"	13.8	38.1	1.65	120.6	18	117
	2"	13.8	50.8	1.65	146.0	18	117
	2 1/2"	13.8	63.5	1.65	158.8	30	105
	3"	13.8	76.2	1.65	171.4	30	105
	4"	13.8	101.6	2.11	209.6	45	90

All thermowells of the series TW61 that are internally pressurised, with a nominal diameter (DN) > 25 mm, are manufactured and tested to module H of the pressure equipment directive.

Angular housing

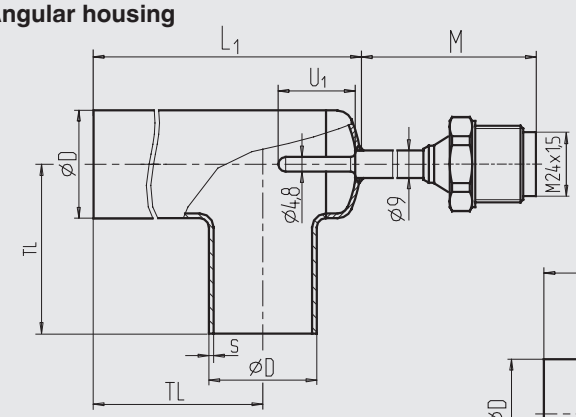

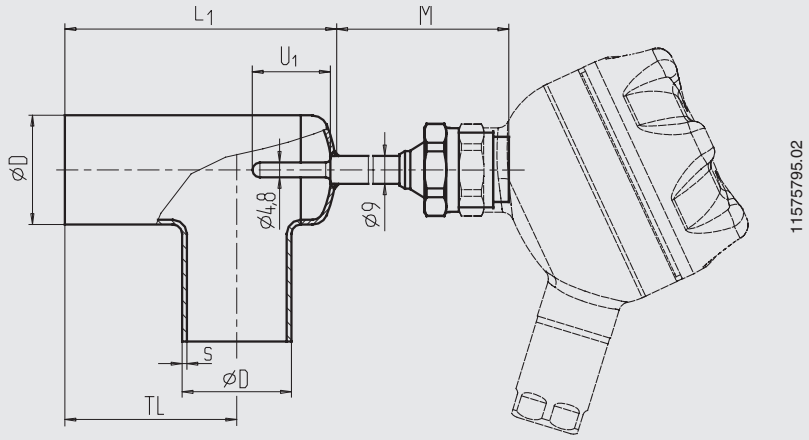

Nominal width of pipe		Nominal pressure in bar	Outer diameter of pipe	Pipe schedule	Tube length		Thermowell insertion length	Neck tube length
DN / OD		PN	Ø D	s	TL	L_1	U_1	M
DIN 11866 row A or metric	10	25	13	1.5	35	55	14	121
	15	25	19	1.5	35	55	18	117
	20	25	23	1.5	40	63	18	117
	25	25	29	1.5	50	77	30	105
DIN 11866 row A or metric	32	25	35	1.5	55	87	30	105
	40	25	41	1.5	60	97	30	105
	50	25	53	1.5	80	126	30	105
	65	16	70	2.0	105	165	45	90
	80	16	85	2.0	130	201	45	90
	100	12.5	104	2.0	155	241	45	90
DIN 11866 row B or ISO	8 (13.5)	25	13.5	1.6	32	55	14	121
	10 (17.2)	25	17.2	1.6	34	55	16	119
	15 (21.3)	25	21.3	1.6	36	58	18	117
	20 (26.9)	25	26.9	1.6	55	81	30	105
DIN 11866 row B or ISO	25 (33.7)	25	33.7	2.0	60	91	30	105
	32 (42.4)	25	42.4	2.0	65	102	30	105
	40 (48.3)	25	48.3	2.0	65	108	30	105
	50 (60.3)	25	60.3	2.0	90	145	45	90
	65 (76.1)	16	76.1	2.0	110	173	45	90
	80 (88.9)	16	88.9	2.3	130	203	45	90
DIN 11866 row C bzw. ASME BPE	1/2"	13.8	12.7	1.65	47.6	71	14	121
	3/4"	13.8	19.05	1.65	50.8	71	18	117
	1"	13.8	25.4	1.65	54.0	79	18	117
DIN 11866 row C or ASME BPE	1 1/2"	13.8	38.1	1.65	60.3	94	30	105
	2"	13.8	50.8	1.65	73.0	118	30	105
	2 1/2"	13.8	63.5	1.65	79.4	134	45	90
	3"	13.8	76.2	1.65	85.7	150	45	90
	4"	13.8	101.6	2.11	104.8	190	45	90

All thermowells of the series TW61 that are internally pressurised, with a nominal diameter (DN) > 25 mm, are manufactured and tested to module H of the pressure equipment directive.

Electrical connection

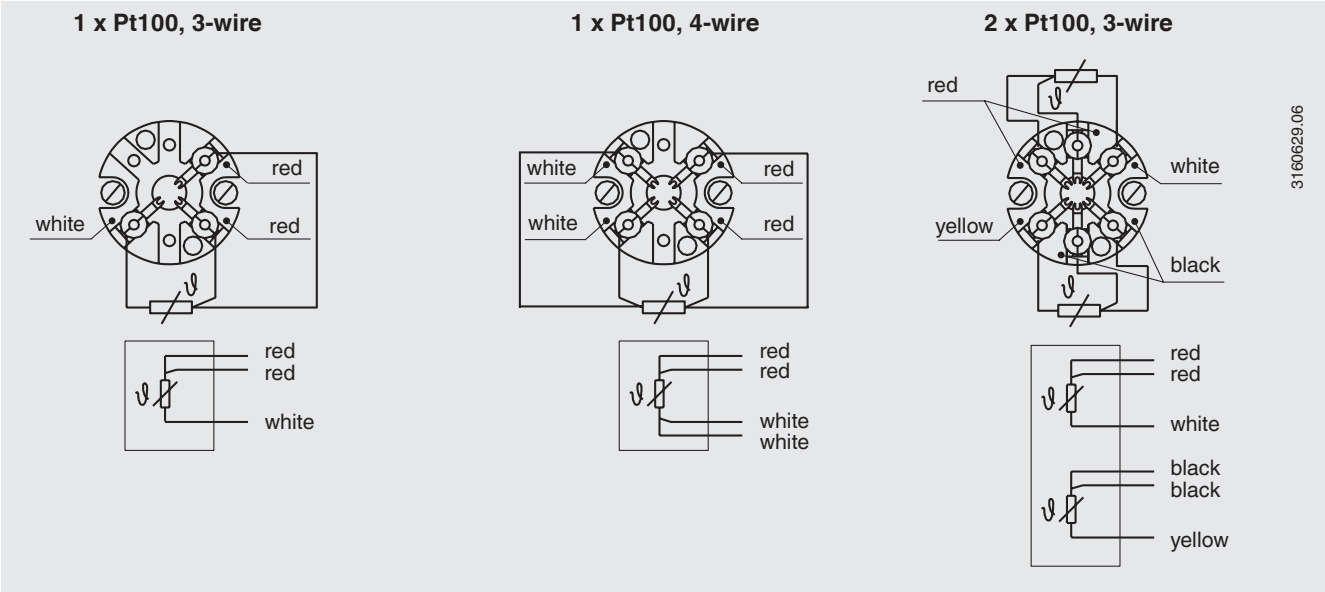

For the electrical connections of built-in temperature transmitters see the corresponding data sheets or operating instructions.

Explosion protection (option)

Resistance thermometers of the TR22-B series are available with an EC-type examination certificate for “intrinsically safe”, Ex i, ignition protection.
These instruments comply with the requirements of ATEX directive for gas and dust.

The permissible power, P_{max}, as well as the permissible ambient temperature, for the respective category can be seen on the EC-type examination certificate and the certificate for hazardours areas or the operating instructions.

Built-in transmitters have their own EC-type examination certificate. The permissible ambient temperature ranges of the built-in transmitters can be taken from the corresponding transmitter approval. The system operator is responsible for using suitable thermowells.

Hygienic design

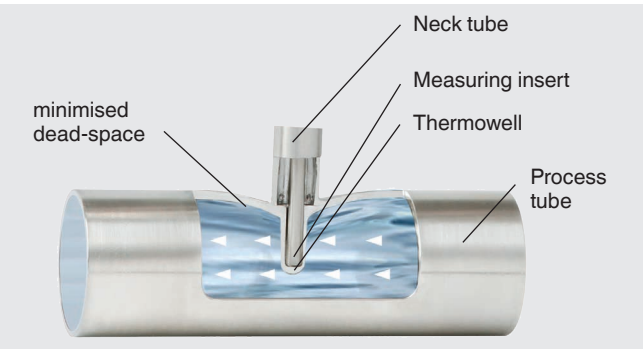

The patented hygienic design of the TW61 flow-through housing enables dead-space minimised, invasive temperature measurement and, through self-draining, a flexible mounting position.

With horizontal installation, make sure that the pipeline is slightly inclined for self-draining.

The installation is carried out by means of orbital welding. Thus, the welding seams are reproducible and controllable.

Approvals

Logo	Description	Country
	EU declaration of conformity ■ EMC directive [1)] EN 61326 emission (group 1, class B) and interference immunity (industrial application) ■ Pressure equipment directive PS > 200 bar, module H, pressure accessory For thermowells > DN 25 (1") and for the associated marking on the measuring instrument or thermowell, WIKA confirms conformity with the pressure equipment directive in accordance with the conformity assessment procedure, module H. For thermowells with nominal widths of ≤ DN 25 (1"), an EC conformity evaluation in accordance with the Pressure Equipment Directive (PED) is not permitted. Those are designed and manufactured without CE marking in line with the applicable sound engineering practice (PED article 3, chapter 3). ■ RoHS directive ■ ATEX directive (option) Hazardous areas Zone 0 gas [II 1G Ex ia IIC T1 ... T6 Ga] Zone 1 mounting to zone 0 Gas [II 1/2G Ex ia IIC T1 ... T6 Ga/Gb] Zone 1 gas [II 2G Ex ia IIC T1 ... T6 Gb] Zone 20 dust [II 1D Ex ia IIIC T125 ... T65 °C Da] Zone 21 mounting to zone 20 dust [II 1/2D Ex ia IIIC T125 ... T65 °C Da/Db] Zone 21 dust [II 2D Ex ia IIIC T125 ... T65 °C Db]	European Union
	IECEx (option) - in conjunction with ATEX Hazardous areas Zone 0 gas [Ex ia IIC T1 ... T6 Ga] Zone 1 mounting to zone 0 Gas [Ex ia IIC T1 ... T6 Ga/Gb] Zone 1 gas [Ex ia IIC T1 ... T6 Gb] Zone 20 dust [Ex ia IIIC T125 ... T65 °C Da] Zone 21 mounting to zone 20 dust [Ex ia IIIC T125 ... T65 °C Da/Db] Zone 21 dust [Ex ia IIIC T125 ... T65 °C Db]	International
	EAC (option) ■ EMC directive [1)] ■ Hazardous areas Zone 0 gas [0 Ex ia IIC T6…T1 Ga X] Zone 1 gas [1 Ex ia IIC T6…T1 Gb X] Zone 20 dust [Ex ia IIIC T80…T440 Da X] Zone 21 dust [Ex ia IIIC T80…T440 Db X]	Eurasian Economic Community
	INMETRO (option) ■ Metrology, measurement technology ■ Hazardous areas Zone 0 gas [Ex ia IIC T3 ... T6 Ga] Zone 1 mounting to zone 0 Gas [Ex ib IIC T3 ... T6 Ga/Gb] Zone 1 gas [Ex ib IIC T3 ... T6 Gb] Zone 20 dust [Ex ia IIIC T125 ... T65 °C Da] Zone 21 mounting to zone 20 dust [Ex ib IIIC T125 ... T65 °C Da/Db] Zone 21 dust [Ex ib IIIC T125 ... T65 °C Db]	Brazil
	KCs - KOSHA (option) Hazardous areas Zone 0 gas [Ex ia IIC T4 ... T6] Zone 1 gas [Ex ib IIC T4 ... T6]	South Korea
-	**PESO (option)** Hazardous areas Zone 0 gas [Ex ia IIC T1 ... T6 Ga] Zone 1 mounting to zone 0 gas [Ex ib IIC T3 ... T6 Ga/Gb] Zone 1 gas [Ex ib IIC T3 ... T6 Gb]	India
	GOST (option) Metrology, measurement technology	Russia

Logo	Description	Country
	KazInMetr (option) Metrology, measurement technology	Kazakhstan
-	**MTSCHS (option)** Permission for commissioning	Kazakhstan
	Uzstandard (option) Metrology, measurement technology	Uzbekistan
	3-A (option) 2) Sanitary Standard Flow-through housing: yes, for all dimensions Angular housing: yes, from DIN 11866 row A: DN 32 ... 100 DIN 11866 row B: DN 25 ... 80 DIN 11866 row C: DN 1 ½" ... 4"	USA
	EHEDG (option) 2) Hygienic Equipment Design Flow-through housing: yes, for all dimensions Angular housing: yes, from DIN 11866 row A: DN 32 ... 100 DIN 11866 row B: DN 25 ... 80 DIN 11866 row C: DN 1 ½" ... 4"	European Union

1) Only for built-in transmitter
2) Confirmation of 3-A or EHEDG conformity only valid with separately selectable 2.2 test report

Instruments marked with “ia” may also be used in areas only requiring instruments marked with “ib” or “ic”.
If an instrument with “ia” marking has been used in an area with requirements in accordance with “ib” or “ic”, it can no longer be operated in areas with requirements in accordance with “ia” afterwards.

Certificates (option)

- 2.2 test report
- 3.1 inspection certificate
- DKD/DAkkS calibration certificate
- Certificate of the surface roughness of wetted parts
- Hygiene certificate

Approvals and certificates, see website

Patents, property rights

- Case with easily cleanable twist crown, integrated into the case cap (GM 000984349)
- Dead-space free welding nipple for thermowell model TW61 (DE 102010037994 and US 12 897.080)

Ordering information
Model / Explosion protection / Output signal / Sensor / Class accuracy / Temperature range / Connection head / Cable gland / Transmitter / Thermowell / Process connection (nominal width of pipe) / Wetted-parts materials / Neck tube length / Certificates / Optional further sealing combinations

© 02/2011 WIKA Alexander Wiegand SE & Co. KG, all rights reserved.
The specifications given in this document represent the state of engineering at the time of publishing.
We reserve the right to make modifications to the specifications and materials.

03/2019 EN

WIKA Alexander Wiegand SE & Co. KG
Alexander-Wiegand-Straße 30
63911 Klingenberg/Germany
Tel. +49 9372 132-0
Fax +49 9372 132-406
info@wika.de
www.wika.de